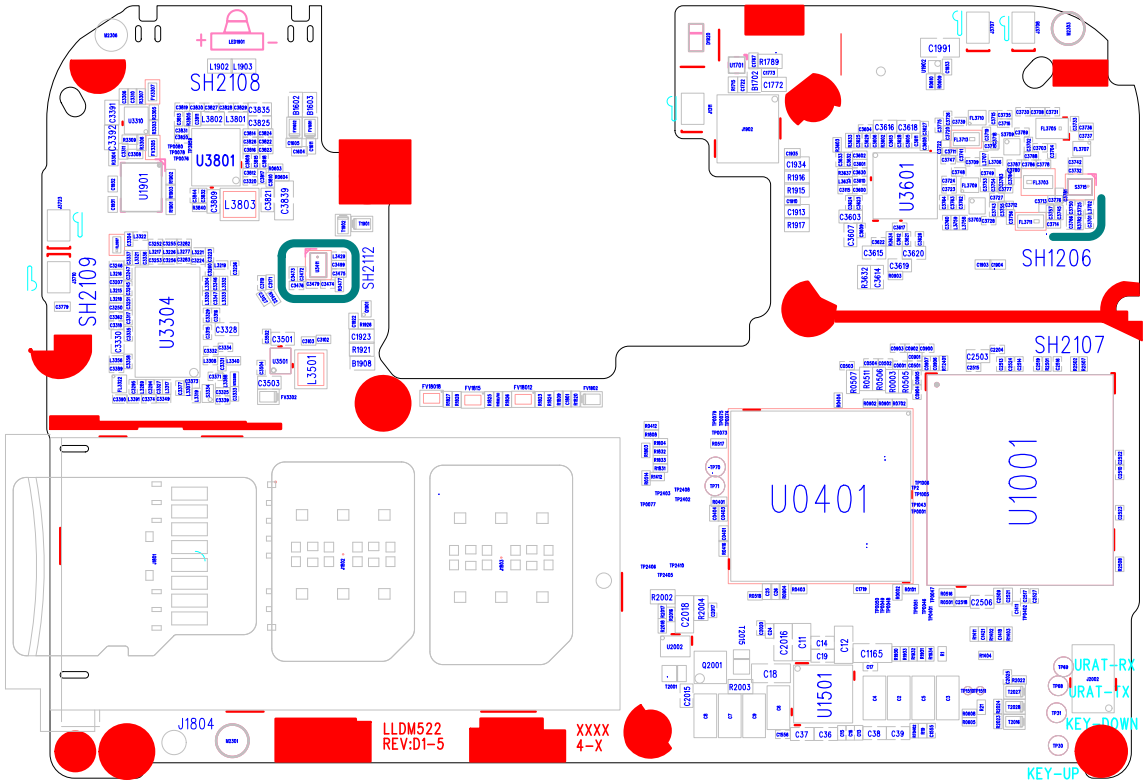
SH2108
U3801
U1901
SH2109
U3304
SH2112
U3601
SH1206
SH2107
U0401
U1001
U1501
J1804
LLDM522
REV:D1-5
XXXX
4-X
URAT-RX
URAT-TX
KEY-DOWN
KEY-UP

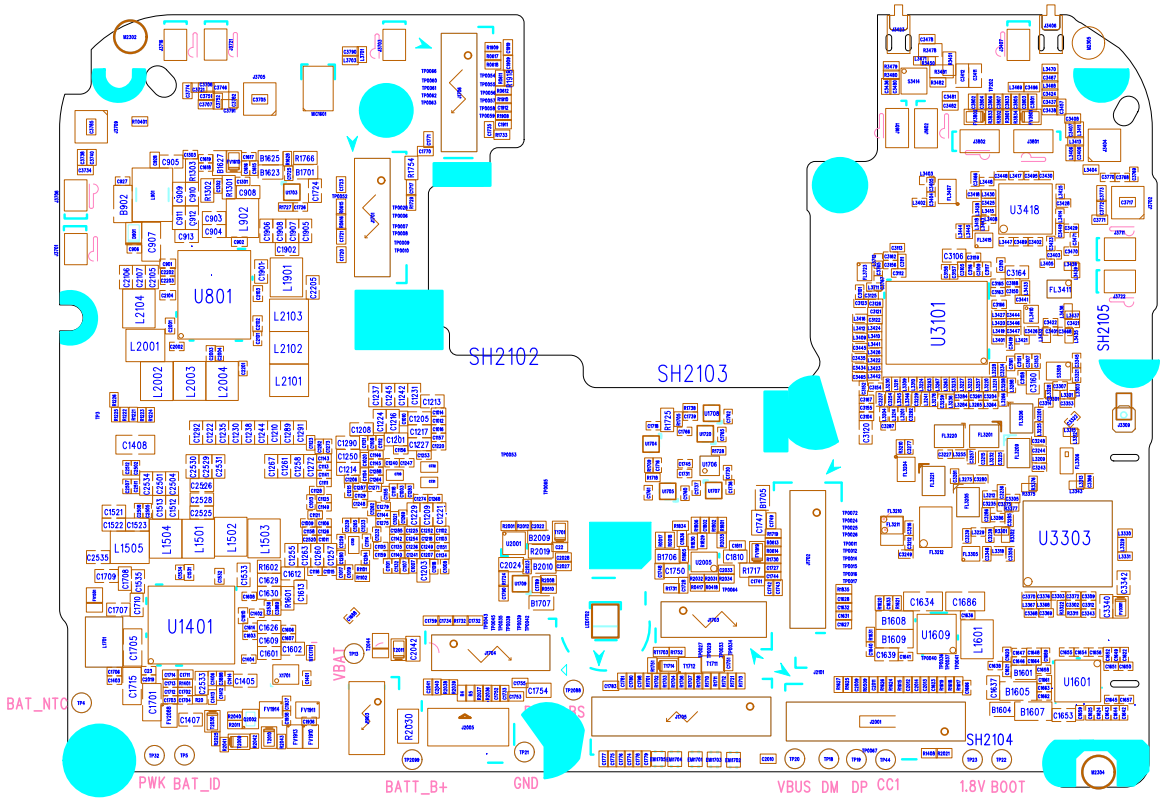
U801
U1401
U3101
U3418
U3303
U1609
U1601
SH2102
SH2103
SH2104
SH2105
BAT_NTC
PWK BAT_ID
BATT_B+
GND
VBAT
VBUS DM DP CC1
1.8V BOOT

REVISION RECORD			
LTR	ECO NO:	APPROVED:	DATE:

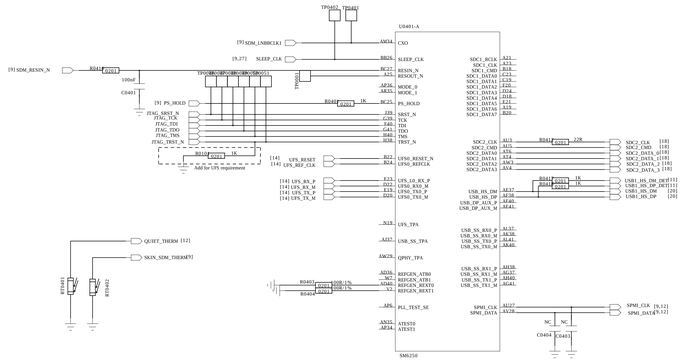

DRAWN: <Drawn By>	DATED: <Drawn Date>	COMPANY: <Company Name>	
CHECKED: <Checked By>	DATED: <Checked Date>	TITLE: <Title>	
QUALITY CONTROL: <QC By>	DATED: <QC Date>	CODE: <Code>	SIZE: A0
RELEASED: <Released By>	DATED: <Release Date>	DRAWING NO: <Drawing Number>	REV: <Revision>
		SCALE: <Scale>	SHEET: 1 OF 30

REVISION RECORD			
LTR	ECO NO:	APPROVED:	DATE:

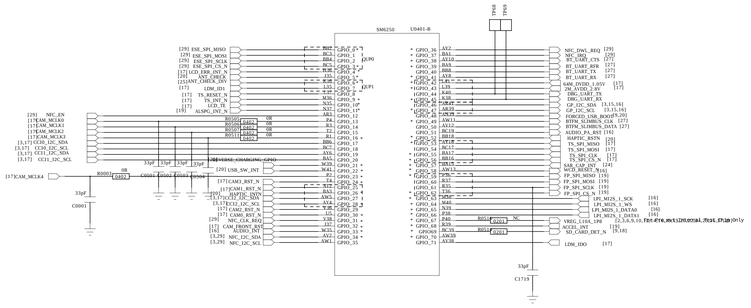

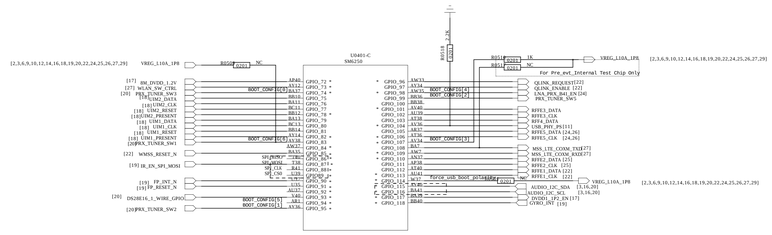
U0401-C
SM6250
[2,3,6,9,10,12,14,16,18,19,20,22,24,25,26,27,29]
VREG_L10A_1P8
R0506
NC
R0518
1.2V
R0515
1K
R0514
NC
For Pre_evt_Internal_Test_Chip_Only
[17] RM_DVDD_1.2V
[27] WLAN_SW_CTRL
[20] PRX_TUNER_SW3
UIM2_DATA
[18] UIM2_CLK
[18] UIM2_RESET
[18]UIM2_PRESENT
[18] UIM1_DATA
[18] UIM1_CLK
[18] UIM1_RESET
[18] UIM1_PRESENT
[20]PRX_TUNER_SW1
[22] WMSS_RESET_N
SPI_PWR
SPI_MISO
SPI_CLK
SPI_CS_N
[19] IR_EN_SPI_MOSI
[19] FP_INT_N
[19]FP_RESET_N
[20] DS28E16_1_WIRE_GPIO
[20]PRX_TUNER_SW2
BOOT_CONFIG[4]
BOOT_CONFIG[5]
BOOT_CONFIG[6]
BOOT_CONFIG[7]
BOOT_CONFIG[0]
BOOT_CONFIG[1]
GPIO_72
GPIO_73
GPIO_74
GPIO_75
GPIO_76
GPIO_77
GPIO_78
GPIO_79
GPIO_80
GPIO_81
GPIO_82
GPIO_83
GPIO_84
GPIO_85
GPIO_86
GPIO_87
GPIO_88
GPIO_89
GPIO_90
GPIO_91
GPIO_92
GPIO_93
GPIO_94
GPIO_95
GPIO_96
GPIO_97
GPIO_98
GPIO_99
GPIO_100
GPIO_101
GPIO_102
GPIO_103
GPIO_104
GPIO_105
GPIO_106
GPIO_107
GPIO_108
GPIO_109
GPIO_110
GPIO_111
GPIO_112
GPIO_113
GPIO_114
GPIO_115
GPIO_116
GPIO_117
GPIO_118
BOOT_CONFIG[4]
BOOT_CONFIG[2]
BOOT_CONFIG[3]
BOOT_CONFIG[0,3]
FORCE_USB_BOOT_CONFIG
QLINK_REQUEST[22]
QLINK_ENABLE [22]
LNA_PRX_Bal_EN [24]
PRX_TUNER_SW5
RFFE3_DATA
RFFE3_CLK
RFFA_DATA
USB_PHY_PS[11]
RFFE2_DATA [26]
RFFE2_CLK [24,26]
MSS_LTE_COXM_TXD[77]
MSS_LTE_COXM_RXD[77]
RFFE1_DATA [22]
RFFE2_CLK [25]
RFFE1_DATA [22]
RFFE1_CLK [22]
VREG_L10A_1P8
AUDIO_I2C_SDA [3,16,20]
AUDIO_I2C_SCL [3,16,20]
DVDD1_1P2_EN [17]
GYRO_INT [19]
R0507
R0508
R0509
R0510
R0511
R0512
R0513
R0514
R0515
R0516
R0517
R0518
R0519
R0520
R0521
R0522
R0523
R0524
R0525
R0526
R0527
R0528
R0529
R0530
R0531
R0532
R0533
R0534
R0535
R0536
R0537
R0538
R0539
R0540
R0541
R0542
R0543
R0544
R0545
R0546

REVISION RECORD			
LTR	ECO NO:	APPROVED:	DATE:

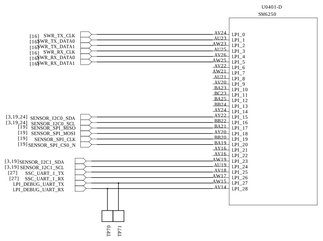

I2C BUS PULL UPS

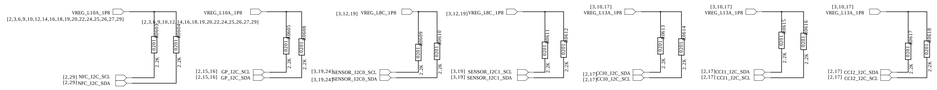

COMPANY: <Company Name>			
TITLE: <Title>			
DRAWN: <Drawn By>	DATED: <Drawn Date>	CODE: <Code>	SIZE: A0
CHECKED: <Checked By>	DATED: <Checked Date>	DRAWING NO: <Drawing Number>	REV: <Revision>
QUALITY CONTROL: <QC By>	DATED: <QC Date>		
RELEASED: <Released By>	DATED: <Release Date>	SCALE: <Scale>	SHEET: 3 OF 30

REVISION RECORD			
LTR	ECO NO:	APPROVED:	DATE:

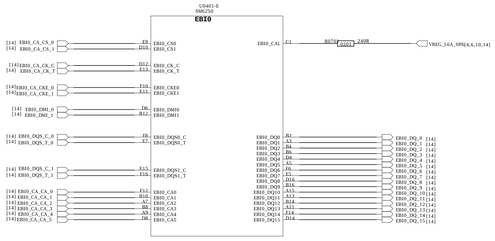

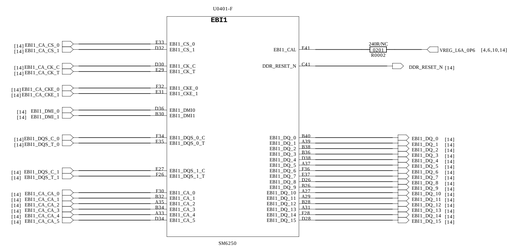

DRAWN: <Drawn By>	DATED: <Drawn Date>	COMPANY: <Company Name>			
CHECKED: <Checked By>	DATED: <Checked Date>	TITLE: <Title>			
QUALITY CONTROL: <QC By>	DATED: <QC Date>	CODE: <Code>	SIZE: A0	DRAWING NO: <Drawing Number>	REV: <Revision>
RELEASED: <Released By>	DATED: <Release Date>	SCALE: <Scale>		SHEET: 4 OF 30	

REVISION RECORD			
LTR	ECO NO:	APPROVED:	DATE:

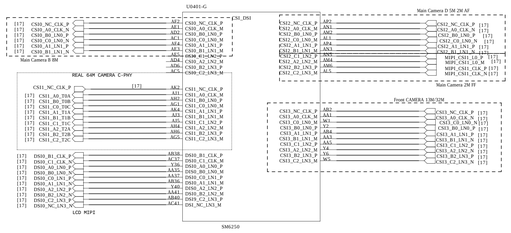

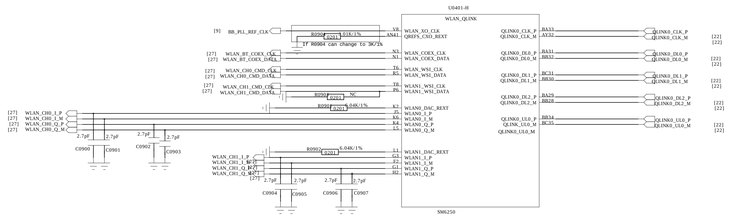

COMPANY:	<Company Name>		
TITLE:	<Title>		
DRAWN: <Drawn By>	DATED: <Drawn Date>		
CHECKED: <Checked By>	DATED: <Checked Date>	CODE: <Code>	SIZE: A0
QUALITY CONTROL: <QC By>	DATED: <QC Date>	DRAWING NO: <Drawing Number>	REV: <Revision>
RELEASED: <Released By>	DATED: <Release Date>	SCALE: <Scale>	SHEET: 5 OF 30

REVISION RECORD			
LTR	ECO NO:	APPROVED:	DATE:

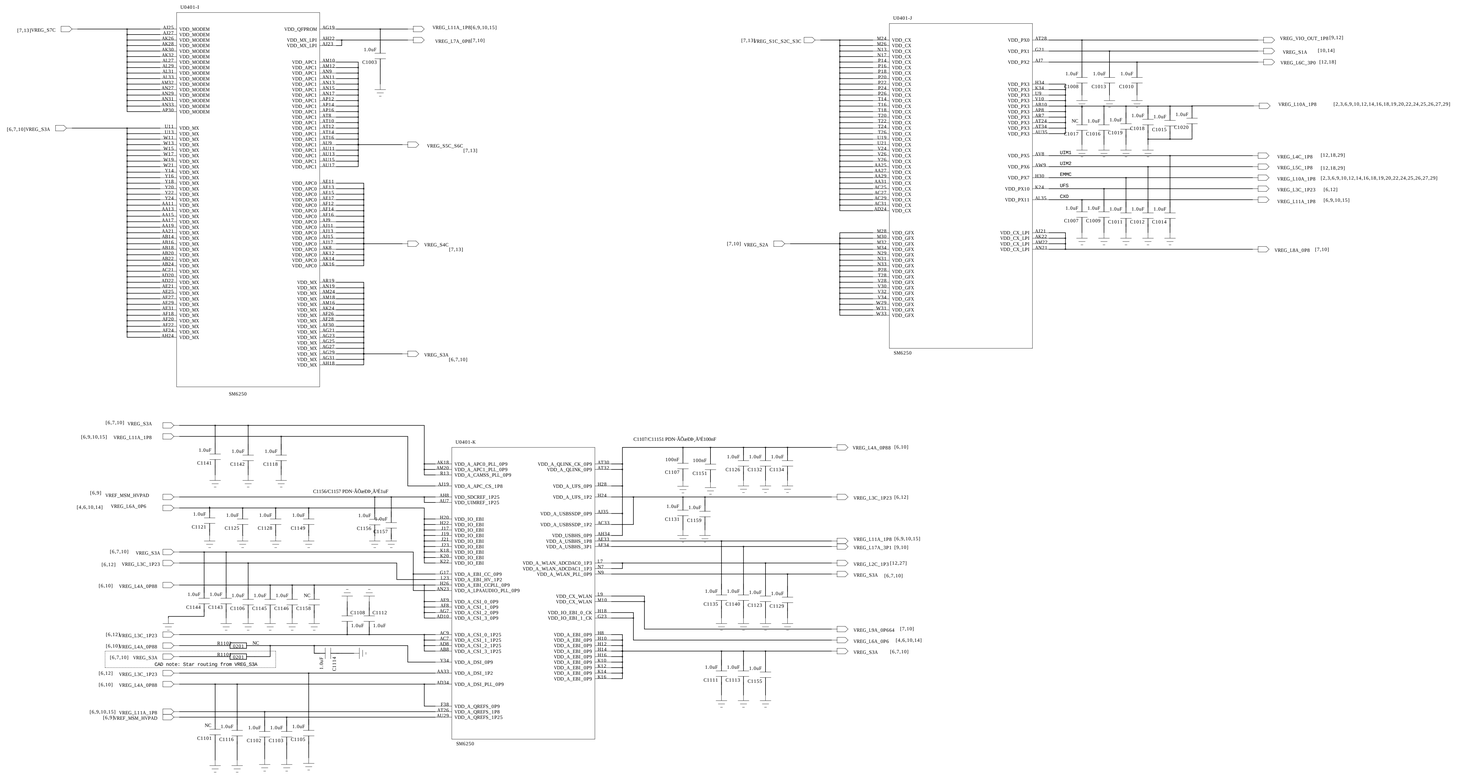

COMPANY:	<Company Name>		
TITLE:	<Title>		
DRAWN: <Drawn By>	DATED: <Drawn Date>		
CHECKED: <Checked By>	DATED: <Checked Date>		
QUALITY CONTROL: <QC By>	DATED: <QC Date>		
RELEASED: <Released By>	DATED: <Release Date>		
CODE: <Code>	SIZE: A0	DRAWING NO: <Drawing Number>	REV: <Revision>
SCALE: <Scale>	SHEET: 6 of 30		

REVISION RECORD			
LTR	ECO NO:	APPROVED:	DATE:

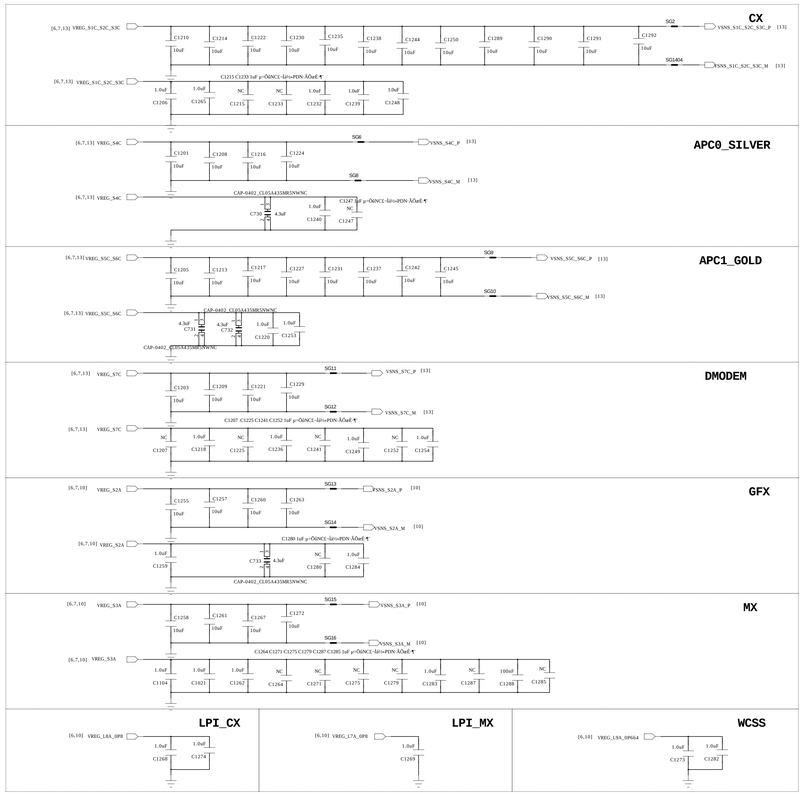

DRAWN: <Drawn By>	DATED: <Drawn Date>	COMPANY: <Company Name>	
CHECKED: <Checked By>	DATED: <Checked Date>	TITLE: <Title>	
QUALITY CONTROL: <QC By>	DATED: <QC Date>	CODE: <Code>	SIZE: A0
RELEASED: <Released By>	DATED: <Release Date>	DRAWING NO: <Drawing Number>	REV: <Revision>
		SCALE: <Scale>	SHEET: 7 OF 30

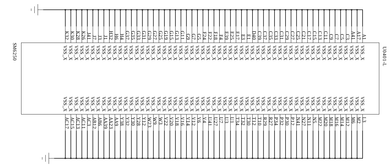

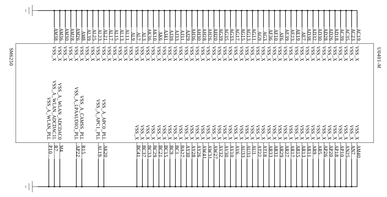

REVISION HISTORY			
SYM	REV NO	APPROVED	DATE

DRAWN: <Drawn By>	DATE: <Drawn Date>	COMPANY: <Company Name>	
CHECKED: <Checked By>	DATE: <Checked Date>	TITLE: <Title>	
QUALITY CONTROL: <QC By>	DATE: <QC Date>	CODE: <Code>	SIZE: A0
RELEASED: <Released By>	DATE: <Release Date>	DRAWING NO: <Drawing Number>	REV: <Revision>
		SCALE: <Scale>	SHEET: Rev 30

REVISION RECORD			
LTR	ECO NO:	APPROVED:	DATE:

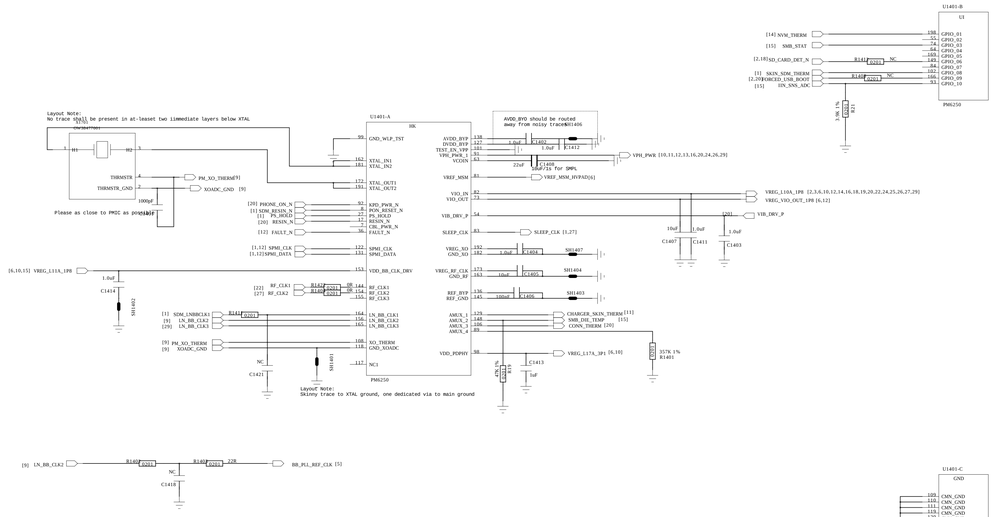

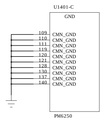

COMPANY: <Company Name>					
TITLE: <Title>					
DRAWN: <Drawn By>	DATED: <Drawn Date>	CODE: <Code>	SIZE: A0	DRAWING NO: <Drawing Number>	REV: <Revision>
CHECKED: <Checked By>	DATED: <Checked Date>				
QUALITY CONTROL: <QC By>	DATED: <QC Date>				
RELEASED: <Released By>	DATED: <Release Date>	SCALE: <Scale>		SHEET: 9 of 30	

REVISION RECORD			
LTR	ECO NO:	APPROVED:	DATE:

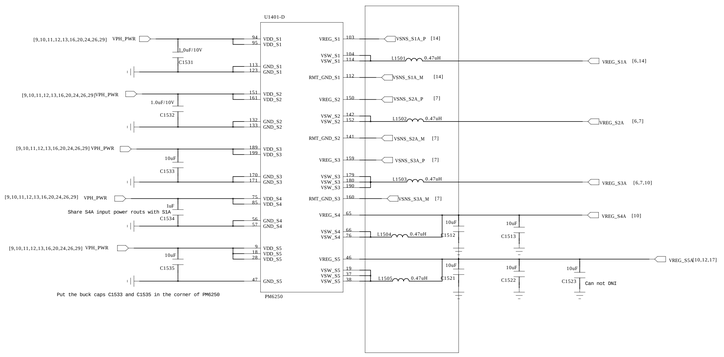

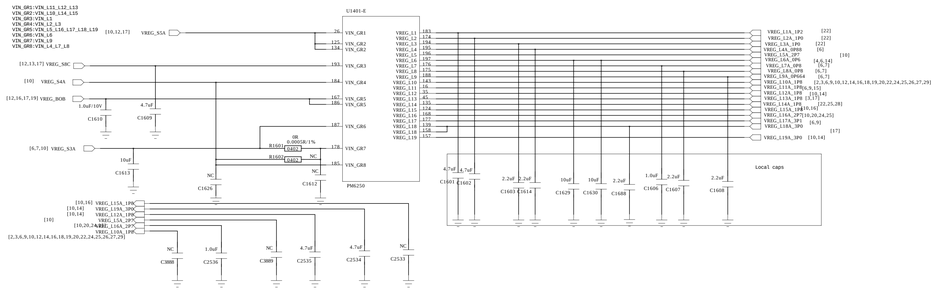

Pseudo capless allows users to place the LDO output capacitor physically/electrically far from the LDO output,near the load.The routing ESL/ESR between the PMIC pin and the remote Cout should meet the capless LDO sepc.
All PMOS LDOs are considered pseudo-capless,unless it has internal PMIC load.If an internal PMIC load,the output cap must be placed close to the PMIC.
Required capacitance for each LDO type can be found in App Note:80-VT310-125

		COMPANY: <Company Name>			
		TITLE: <Title>			
DRAWN: <Drawn By>	DATED: <Drawn Date>				
CHECKED: <Checked By>	DATED: <Checked Date>	CODE: <Code>	SIZE: A0	DRAWING NO: <Drawing Number>	REV: <Revision>
QUALITY CONTROL: <QC By>	DATED: <QC Date>				
RELEASED: <Released By>	DATED: <Release Date>	SCALE: <Scale>		SHEET: 10 OF 30	

REVISION RECORD			
LTR	ECO NO:	APPROVED:	DATE:

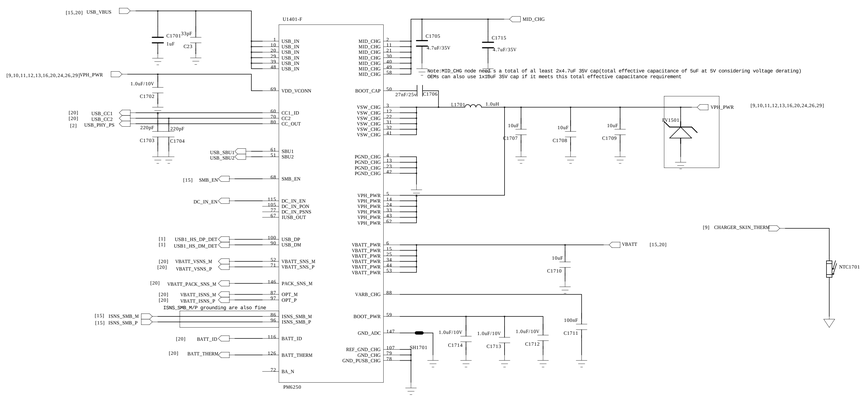

DRAWN: <Drawn By>	DATED: <Drawn Date>	COMPANY: <Company Name>			
CHECKED: <Checked By>	DATED: <Checked Date>	TITLE: <Title>			
QUALITY CONTROL: <QC By>	DATED: <QC Date>	CODE: <Code>	SIZE: A0	DRAWING NO: <Drawing Number>	REV: <Revision>
RELEASED: <Released By>	DATED: <Release Date>	SCALE: <Scale>		SHEET: 14 OF 30	

REVISION RECORD			
LTR	ECO NO:	APPROVED:	DATE:

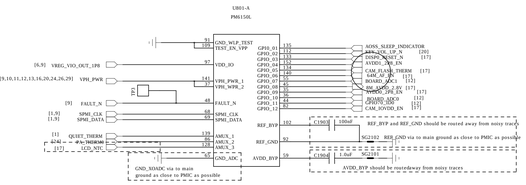

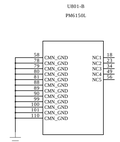

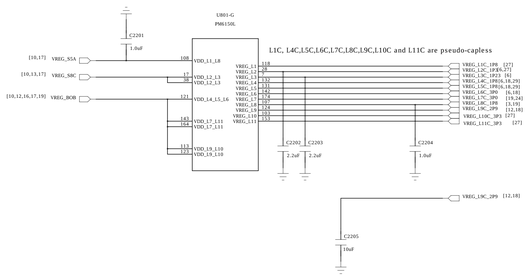

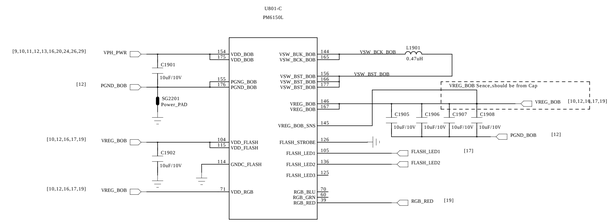

Board ID

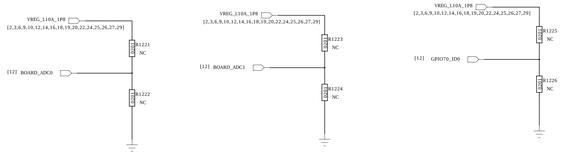

COMPANY: <Company Name>			
TITLE: <Title>			
DRAWN: <Drawn By>	DATED: <Drawn Date>	CODE: <Code>	SIZE: A0
CHECKED: <Checked By>	DATED: <Checked Date>	DRAWING NO: <Drawing Number>	REV: <Revision>
QUALITY CONTROL: <QC By>	DATED: <QC Date>	SCALE: <Scale>	SHEET: 12 OF 30
RELEASED: <Released By>	DATED: <Release Date>		

REVISION RECORD			
LTR	ECO NO:	APPROVED:	DATE:

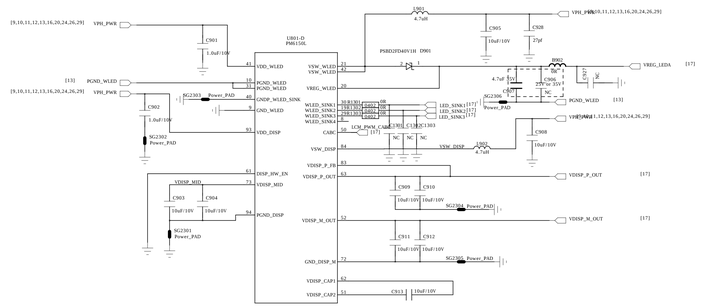

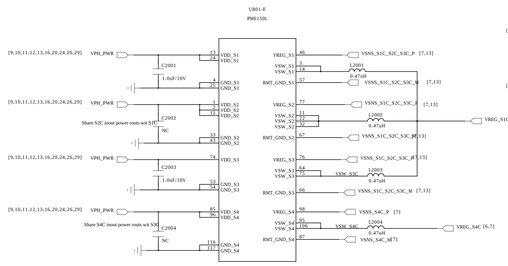

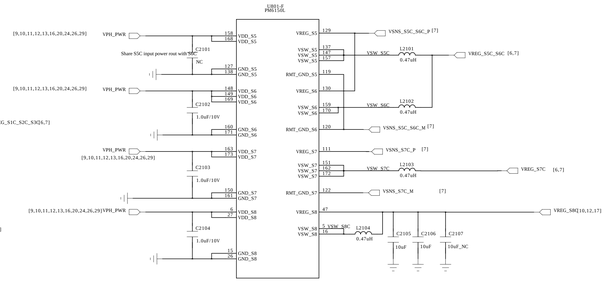

DRAWN: <Drawn By>	DATED: <Drawn Date>	COMPANY: <Company Name>			
CHECKED: <Checked By>	DATED: <Checked Date>	TITLE: <Title>			
QUALITY CONTROL: <QC By>	DATED: <QC Date>	CODE: <Code>	SIZE: A0	DRAWING NO: <Drawing Number>	REV: <Revision>
RELEASED: <Released By>	DATED: <Release Date>	SCALE: <Scale>		SHEET: 12 OF 30	

REVISION RECORD			
LTR	ECO NO:	APPROVED:	DATE:

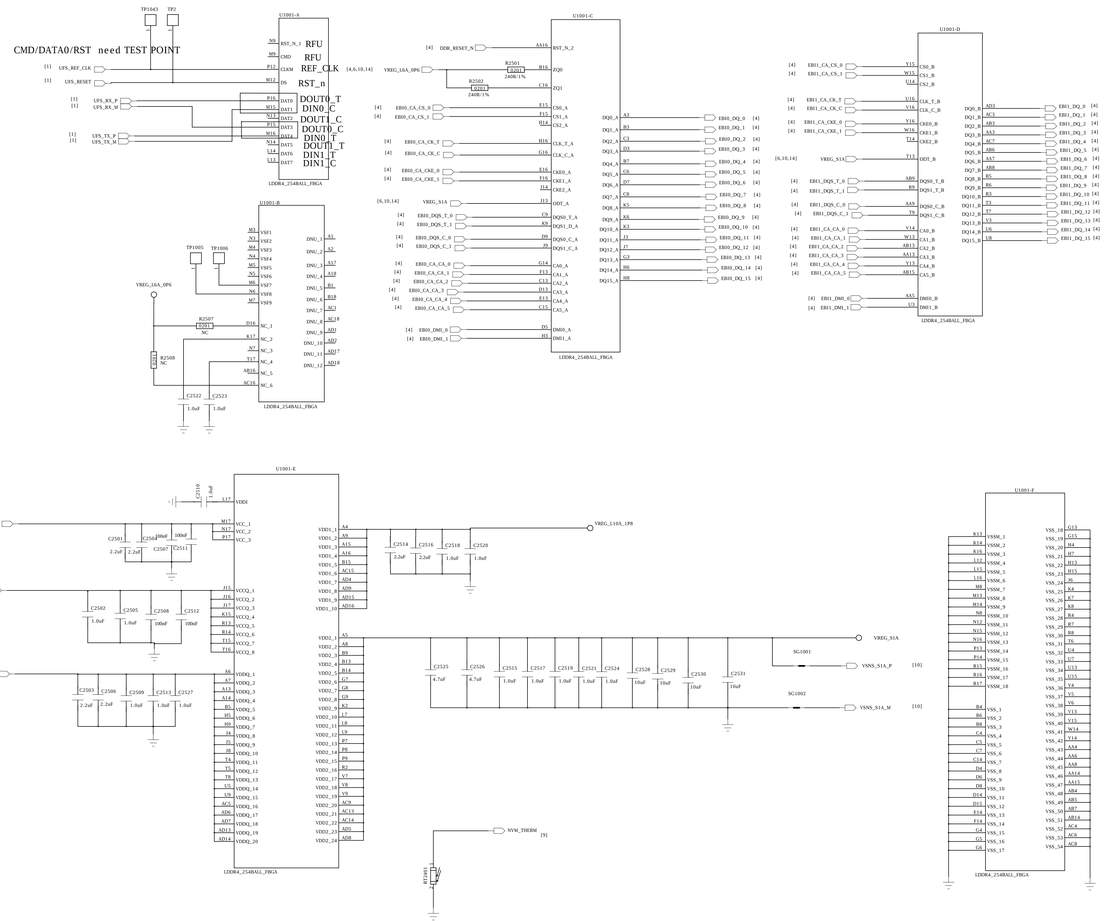

COMPANY: <Company Name>			
TITLE: <Title>			
DRAWN: <Drawn By>	DATED: <Drawn Date>		
CHECKED: <Checked By>	DATED: <Checked Date>	CODE: <Code>	SIZE: A0
QUALITY CONTROL: <QC By>	DATED: <QC Date>	DRAWING NO: <Drawing Number>	REV: <Revision>
RELEASED: <Released By>	DATED: <Release Date>	SCALE: <Scale>	SHEET: 14 OF 30

REVISION RECORD			
LTR	ECO NO:	APPROVED:	DATE:

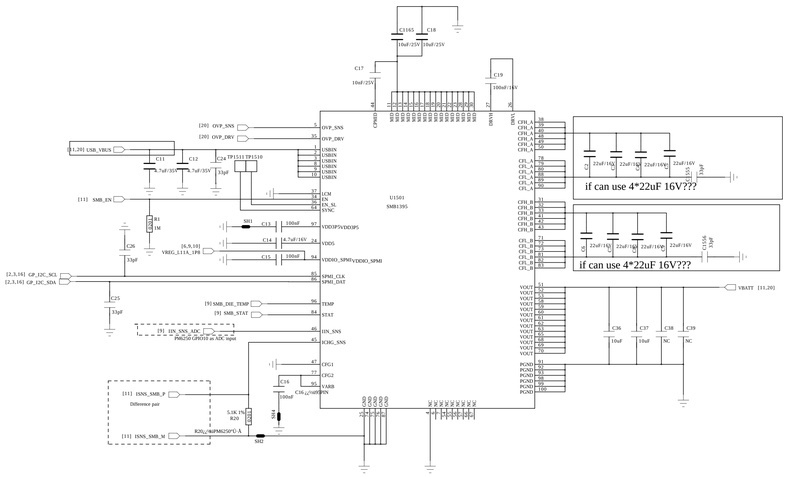

COMPANY: <Company Name>			
TITLE: <Title>			
DRAWN: <Drawn By>	DATED: <Drawn Date>		
CHECKED: <Checked By>	DATED: <Checked Date>	CODE: <Code>	SIZE: A0
QUALITY CONTROL: <QC By>	DATED: <QC Date>	DRAWING NO: <Drawing Number>	REV: <Revision>
RELEASED: <Released By>	DATED: <Release Date>	SCALE: <Scale>	SHEET: 15 OF 30

REVISION RECORD			
LTR	ECO NO:	APPROVED:	DATE:

Audio Codec

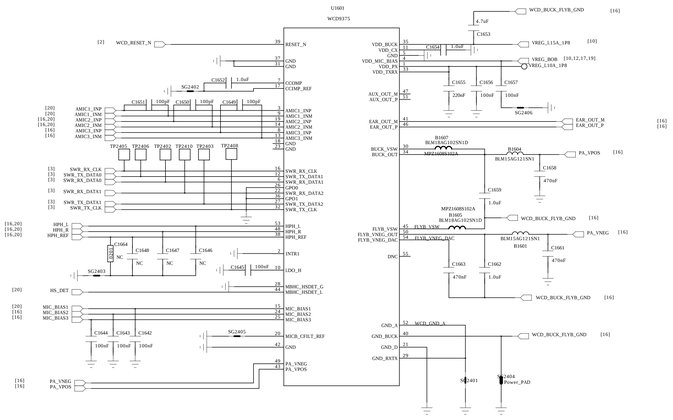

REC

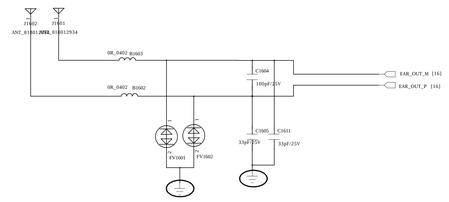

Sub MIC

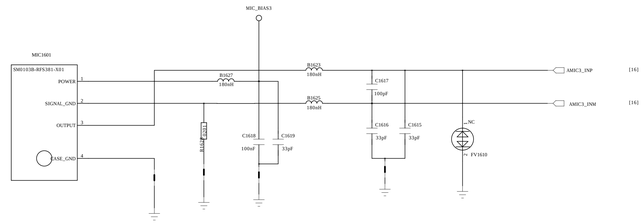

Audio PA

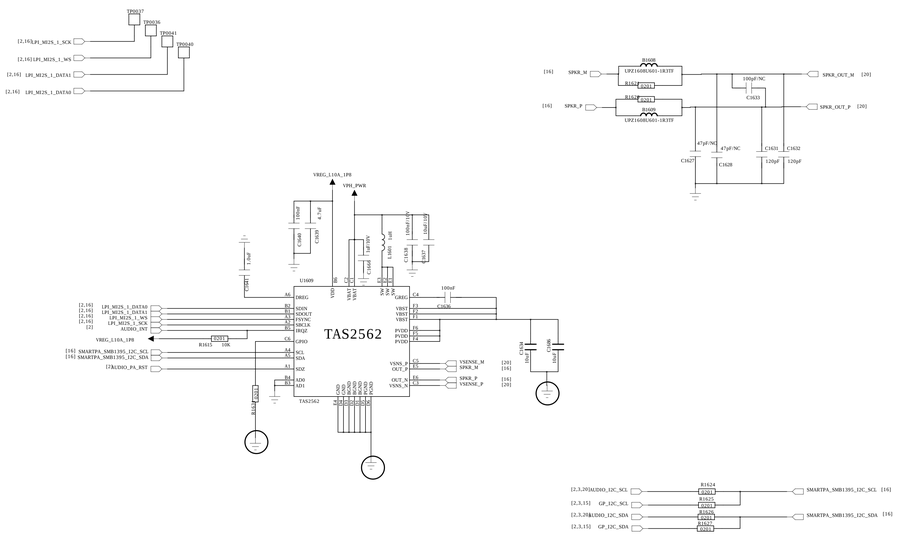

Earphone Audio

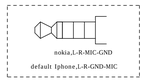

GND
HPH_R
HS_DET
HPH_L
MIC_IN

Note: Ferrite beads and their corresponding bypass capacitors on on CDC_HPH_L_P, CDC_HPH_L_M and CDC_HPH_REF are needed to reduce noise generated by audio/FM concurrency

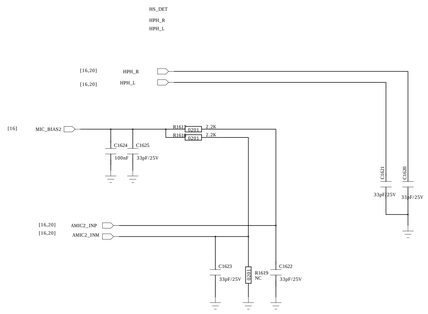

Note: Place B202,B203,C216,C217 close to headset jack connector

Note: For Cable detection

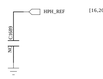

COMPANY: <Company Name>			
TITLE: <Title>			
DRAWN: <Drawn By>	DATED: <Drawn Date>	CODE: <Code>	SIZE: A0
CHECKED: <Checked By>	DATED: <Checked Date>	DRAWING NO: <Drawing Number>	REV: <Revision>
QUALITY CONTROL: <QC By>	DATED: <QC Date>		
RELEASED: <Released By>	DATED: <Release Date>	SCALE: <Scale>	SHEET: 16 OF 30

LTR	ECO NO:	APPROVED:	DATE:

Main Camera B 8M

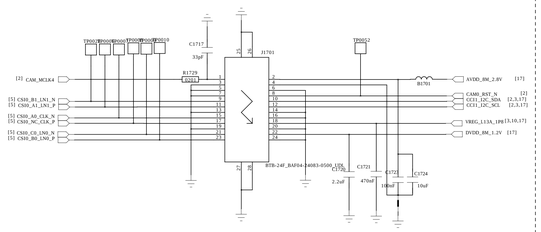

NOTE£ºWL2836D1.2-4/TR

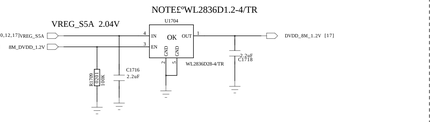

Ç ° Ê ã +8M+5M 2.8V

NOTE£ºWL2836D2.8-4/TR

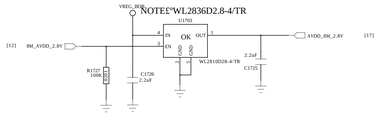

Module	Sensor IC	DOVDD	DVDD	AVDD	AFVDD
	IMX376-AAJHS-C	1.8V	1.05V	2.8V	DW9763 140mA/Max

Main Camera A 64M

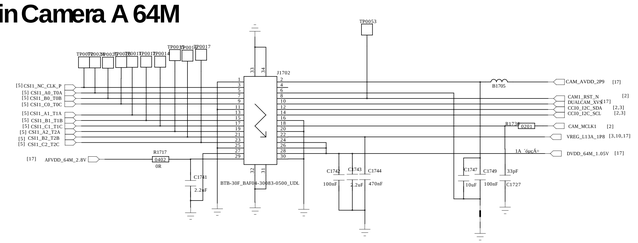

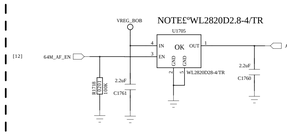

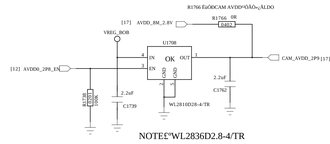

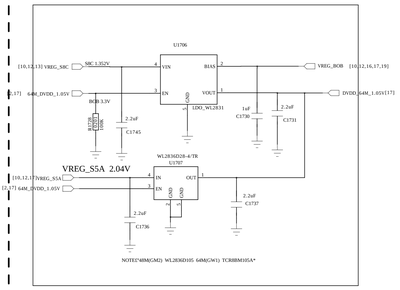

Module	Sensor IC	DOVDD	DVDD	AVDD	AFVDD
	IMX486PQH5-C	1.8V	1.2V	2.7V-4.1~5.2	DW9763 140mA/Max

Main Camera C 2M 2M FF

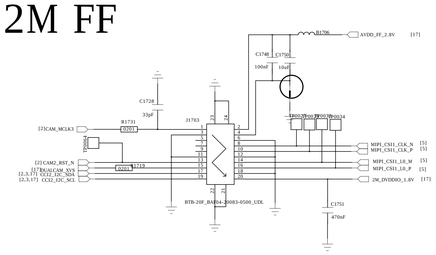

NOTE£ºWL2820D1.8-4/TR 2M VDDIO1.8V

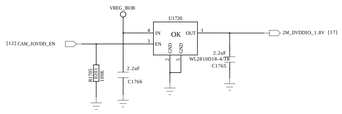

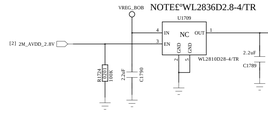

Main Camera D 5M 2M AF

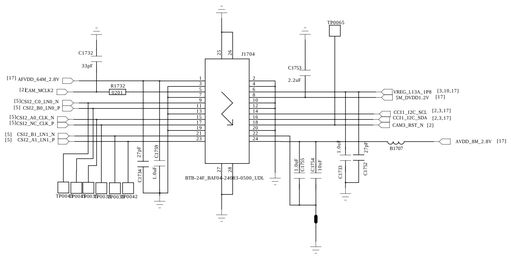

LCM

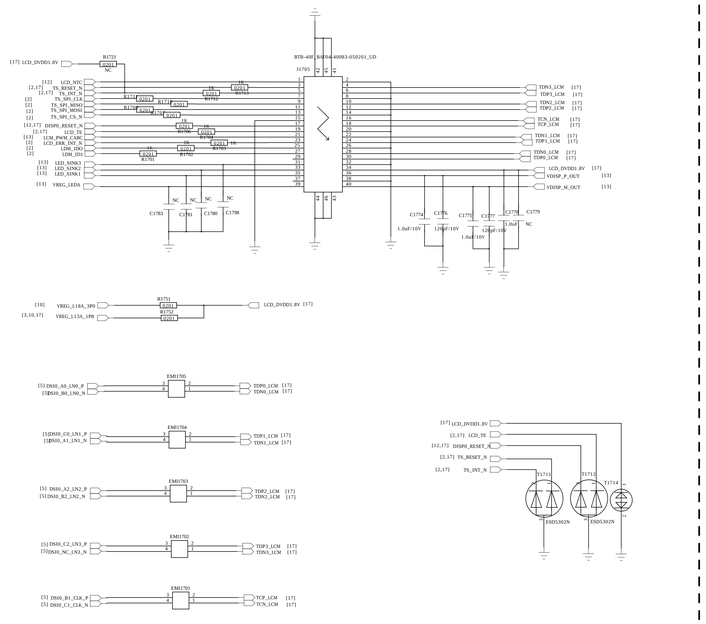

Front Camera

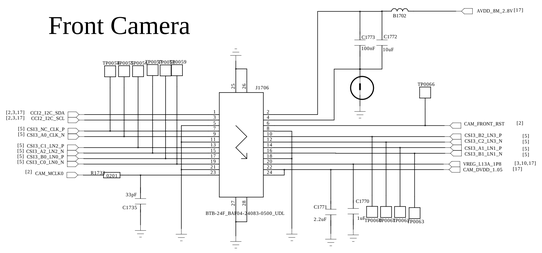

Module	Sensor IC	DOVDD	DVDD	AVDD	AFVDD
OLF0692(ET5)	IMX376-AAJHS-C				
		1.8V	1.05V	2.8V	

Flash Light

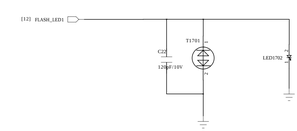

COMPANY: <Company Name>			
TITLE: <Title>			
DRAWN: <Drawn By>	DATED: <Drawn Date>		
CHECKED: <Checked By>	DATED: <Checked Date>	CODE: <Code>	SIZE: A0
QUALITY CONTROL: <QC By>	DATED: <QC Date>	DRAWING NO: <Drawing Number>	REV: <Revision>
RELEASED: <Released By>	DATED: <Release Date>	SCALE: <Scale>	SHEET: 12 OF 30

REVISION RECORD			
LTR	ECO NO:	APPROVED:	DATE:

T-Card

SIM1

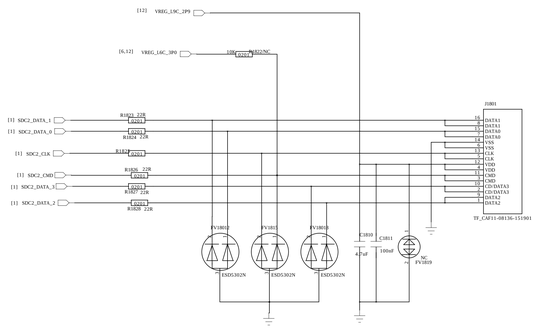

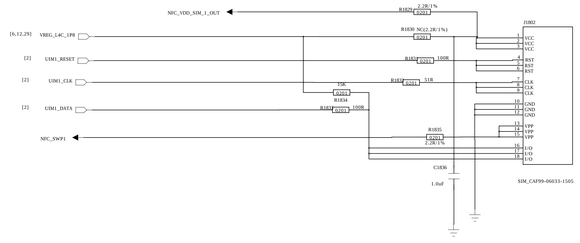

INT

SIM2

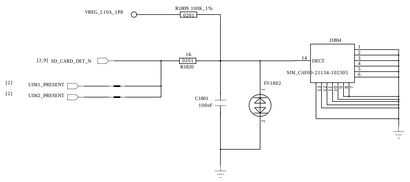

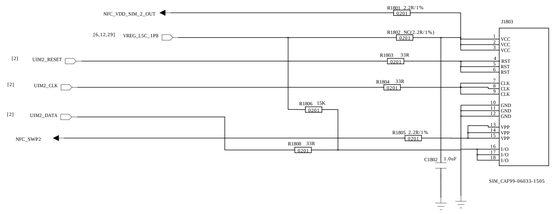

		COMPANY: <Company Name>			
		TITLE: <Title>			
DRAWN: <Drawn By>	DATED: <Drawn Date>				
CHECKED: <Checked By>	DATED: <Checked Date>	CODE: <Code>	SIZE: A0	DRAWING NO: <Drawing Number>	REV: <Revision>
QUALITY CONTROL: <QC By>	DATED: <QC Date>				
RELEASED: <Released By>	DATED: <Release Date>	SCALE: <Scale>		SHEET: 10 OF 30	

REVISION RECORD			
LTR	ECO NO:	APPROVED:	DATE:

M-Sensor

M-Sensor I2C Address: 0x0C

CAD	
0	0X0C
1	0X0D

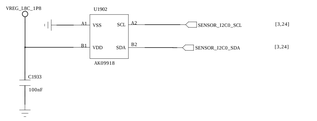

P_SENSOR

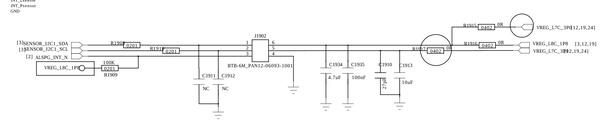

G+Gyro-Sensor

SPI connector

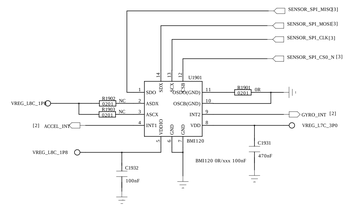

RGB

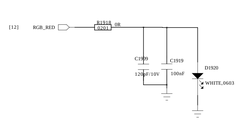

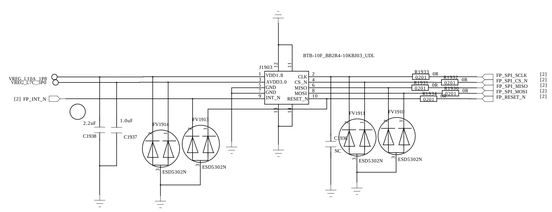

IR

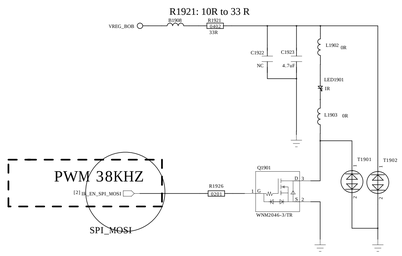

COMPANY: <Company Name>					
TITLE: <Title>					
DRAWN: <Drawn By>	DATED: <Drawn Date>				
CHECKED: <Checked By>	DATED: <Checked Date>	CODE: <Code>	SIZE: A0	DRAWING NO: <Drawing Number>	REV: <Revision>
QUALITY CONTROL: <QC By>	DATED: <QC Date>				
RELEASED: <Released By>	DATED: <Release Date>	SCALE: <Scale>		SHEET: 19 OF 30	

REVISION RECORD			
LTR	ECO NO.	APPROVED:	DATE:

HAPTIC

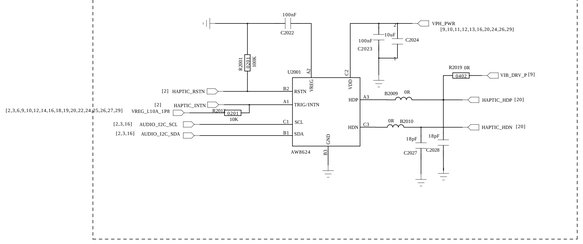

SUB_FPC

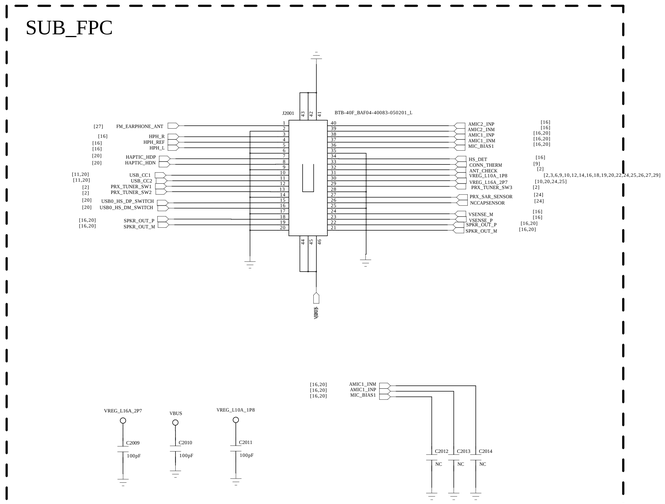

OVP

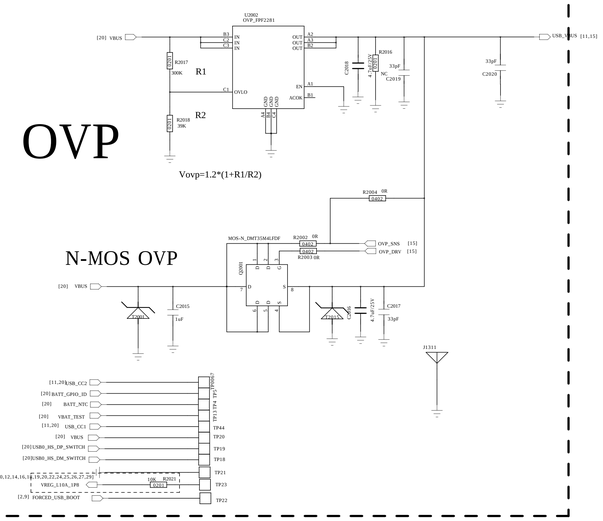

Battery Connector

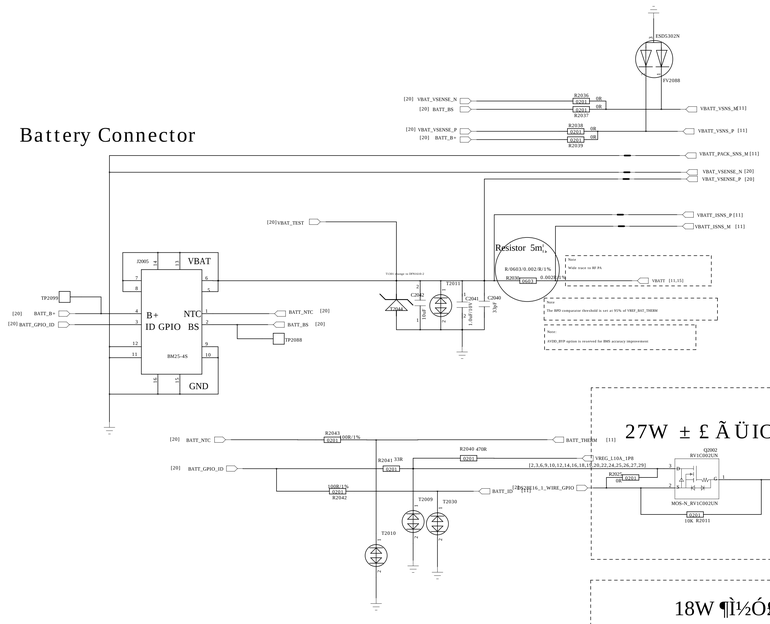

27W ± £ Ã ÜIC

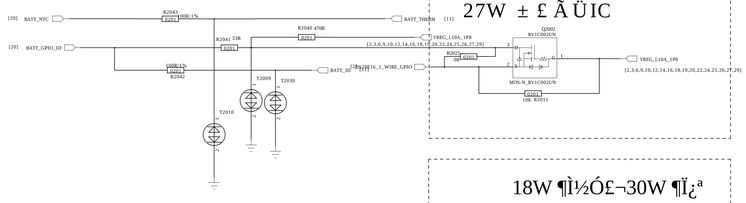

18W ¶Ì½Ó£¬30W ¶Ï¿ª

Sider Key

Signal	Description
KPSNS0	Volume Up
PM_RST_N	Volume Down
KYPD_PWR_N	PWER_ON
PM_RST_N + KYPD_PWR_N	Hardware Reset

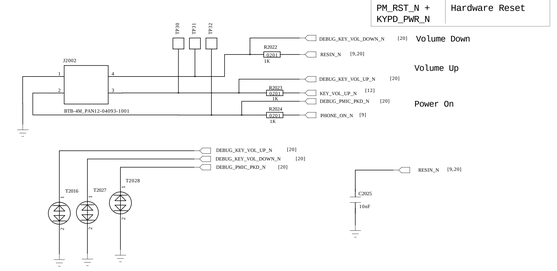

EN=L,SEL1/2=L,Ä¬ÈÏ USBÍ¨ÐÅ£»EN=L,SEL1/2=H D+/D-¶Ì½Ó£¬ÇÐ»»·´Ïò³äµç

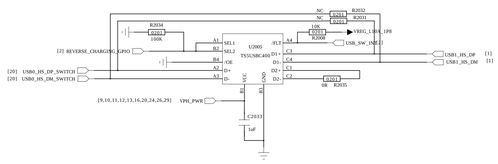

COMPANY: <Company Name>			
TITLE: <Title>			
DRAWN: <Drawn By>	DATED: <Drawn Date>		
CHECKED: <Checked By>	DATED: <Checked Date>		
QUALITY CONTROL: <QC By>	DATED: <QC Date>		
RELEASED: <Released By>	DATED: <Release Date>		
CODE: <Code>	SIZE: A0	DRAWING NO: <Drawing Number>	REV: <Revision>
SCALE: <Scale>		SHEET: 20 OF 30	

REVISION RECORD			
LTR	ECO NO:	APPROVED:	DATE:

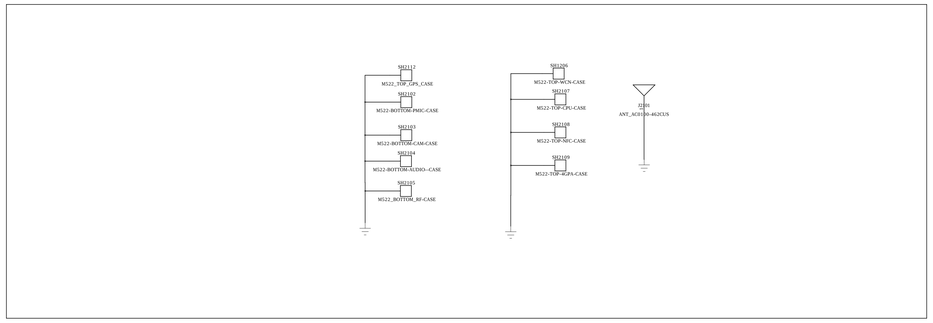

BAD MARK POINT

MARK POINT

		COMPANY: <Company Name>			
		TITLE: <Title>			
DRAWN: <Drawn By>	DATED: <Drawn Date>				
CHECKED: <Checked By>	DATED: <Checked Date>	CODE: <Code>	SIZE: A0	DRAWING NO: <Drawing Number>	REV: <Revision>
QUALITY CONTROL: <QC By>	DATED: <QC Date>				
RELEASED: <Released By>	DATED: <Release Date>	SCALE: <Scale>		SHEET: 24 OF 30	

REVISION RECORD			
LTR	ECO NO:	APPROVED:	DATE:

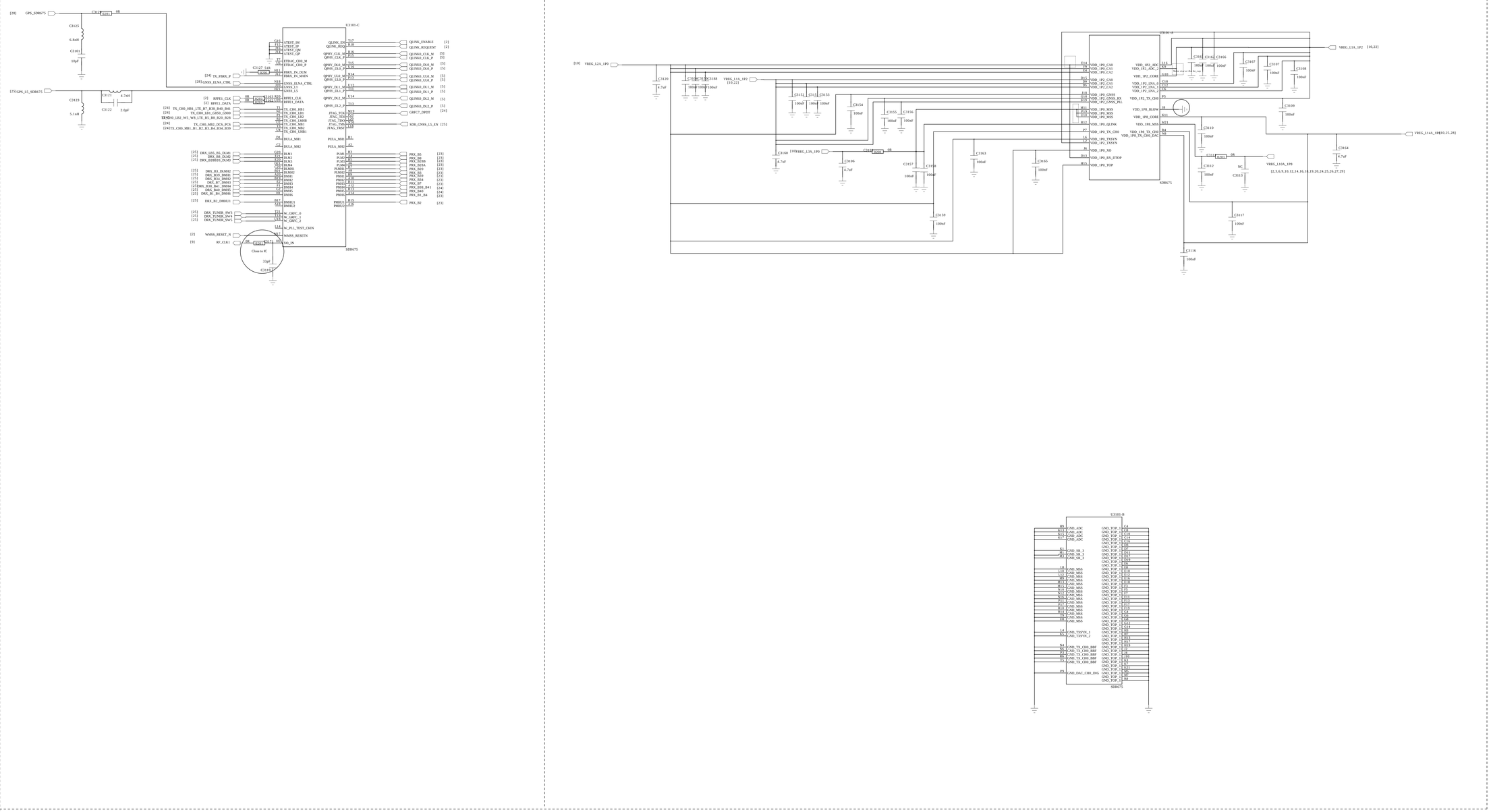

DRAWN: <Drawn By>	DATED: <Drawn Date>	COMPANY: <Company Name>	
CHECKED: <Checked By>	DATED: <Checked Date>	TITLE: <Title>	
QUALITY CONTROL: <QC By>	DATED: <QC Date>	CODE: <Code>	SIZE: A0
RELEASED: <Released By>	DATED: <Release Date>	DRAWING NO: <Drawing Number>	REV: <Revision>
		SCALE: <Scale>	SHEET: 22 30

TRX_B1_B3_B4

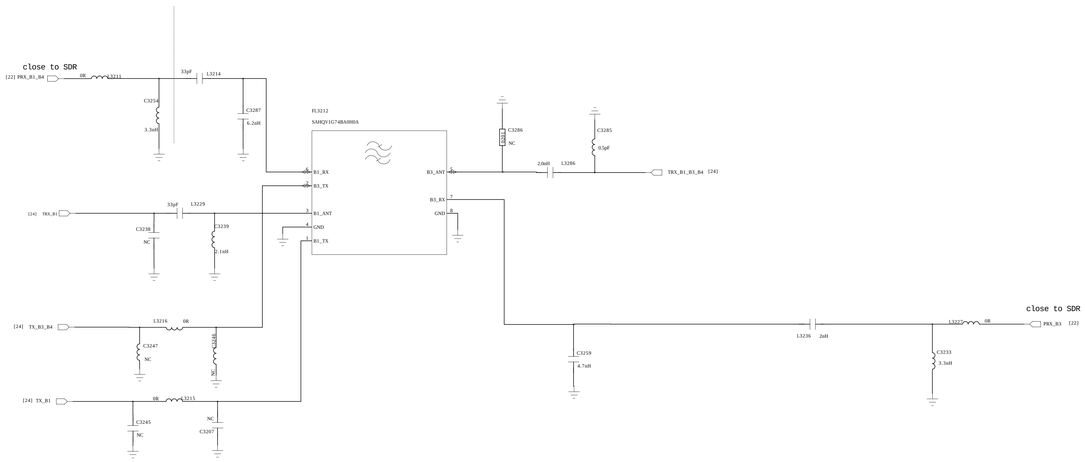

TRX_B7

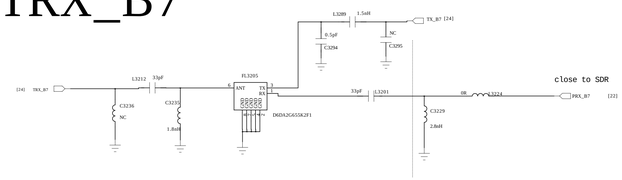

TRX_B8

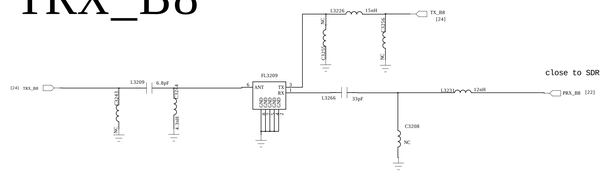

TRX_B2

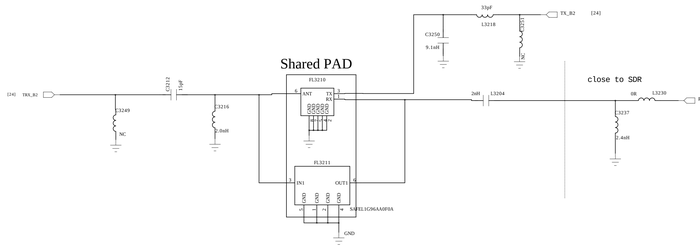

PRX_B34_B39

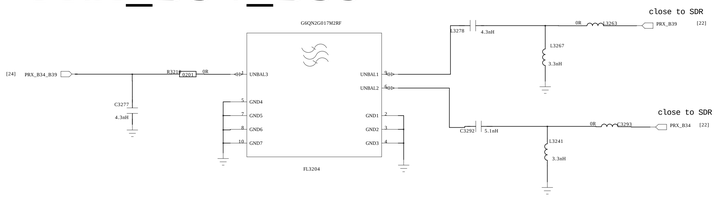

TRX_B5

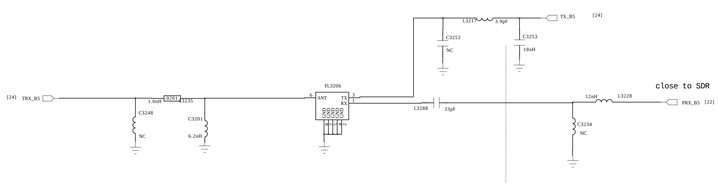

TRX_B28A

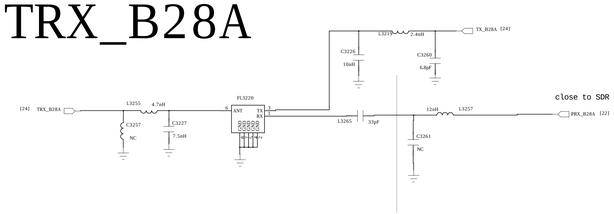

TRX_B20

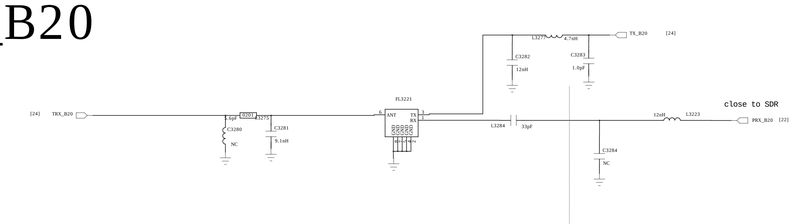

TRX_B28B

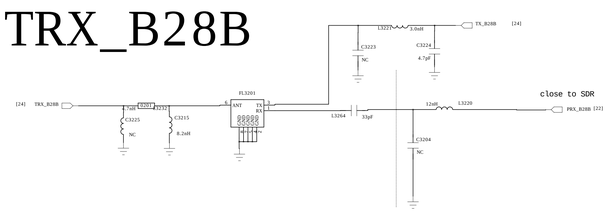

COMPANY: <Company Name>					
TITLE: 20_LTE_DUPLEXER					
DRAWN: LiuMengya	DATED: <Drawn Date>	CODE: <Code>	SIZE: A0	DRAWING NO: <Drawing Number>	REV: <Revision>
CHECKED: LiLi	DATED: <Checked Date>	SCALE: <Scale>		SHEET: 23 of 80	

REVISION RECORD			
LTR	ECO NO:	APPROVED:	DATE:

DPDT

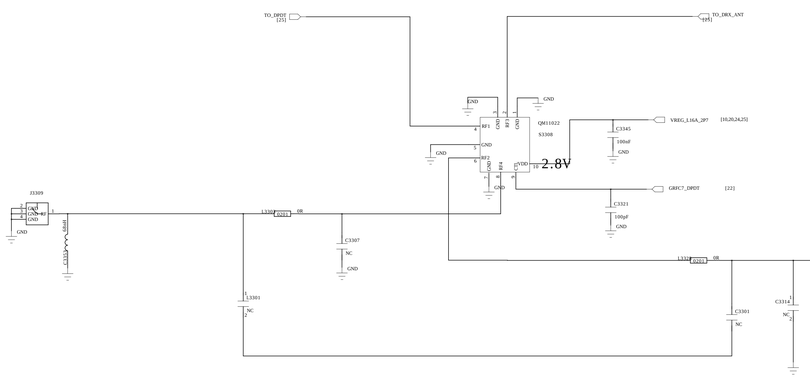

TXM

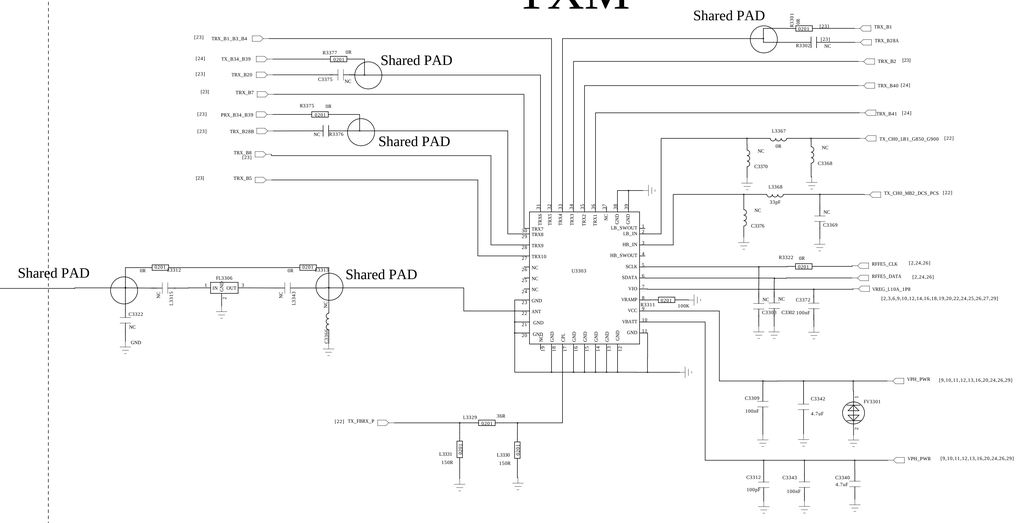

MMMB_PA

PRX_B41

PRX_B40

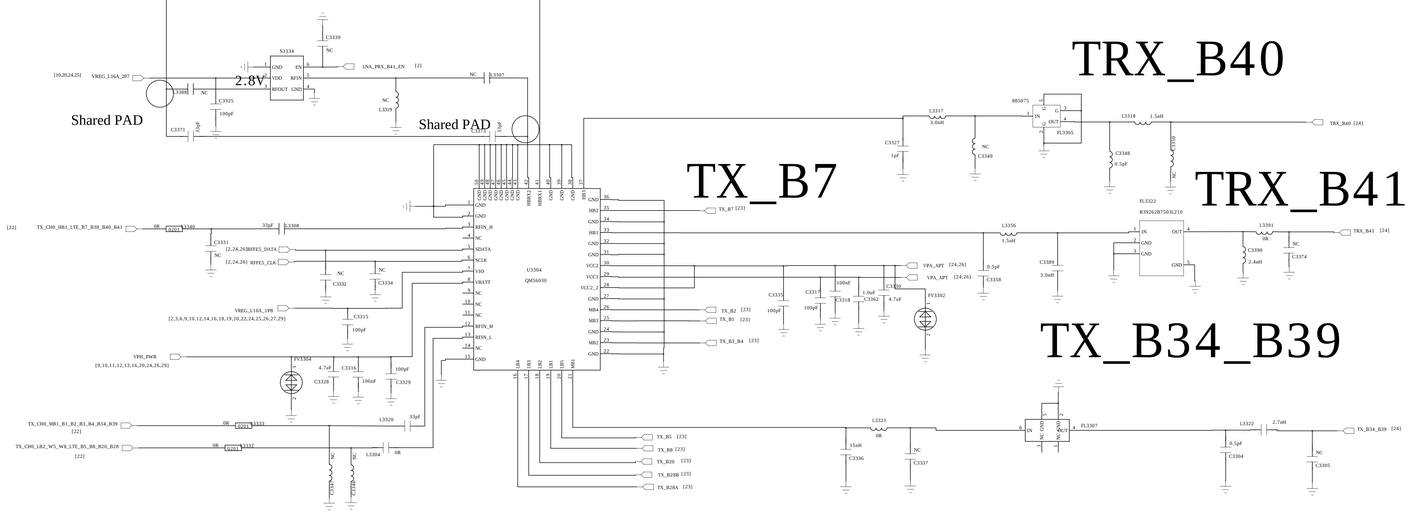

TRX_B40

TX_B7

TRX_B41

TX_B34_B39

SAR_SENSOR

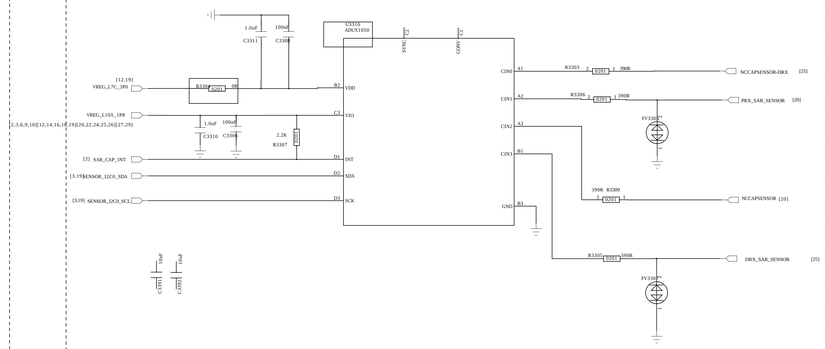

PA_THERMO

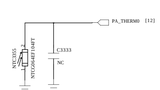

COMPANY: <Company Name>					
TITLE: <Title>					
DRAWN: <Drawn By>	DATED: <Drawn Date>				
CHECKED: <Checked By>	DATED: <Checked Date>	CODE: <Code>	SIZE: A0	DRAWING NO: <Drawing Number>	REV: <Revision>
QUALITY CONTROL: <QC By>	DATED: <QC Date>				
RELEASED: <Released By>	DATED: <Release Date>	SCALE: <Scale>		SHEET: 24 OF 30	

Div Ant Switch

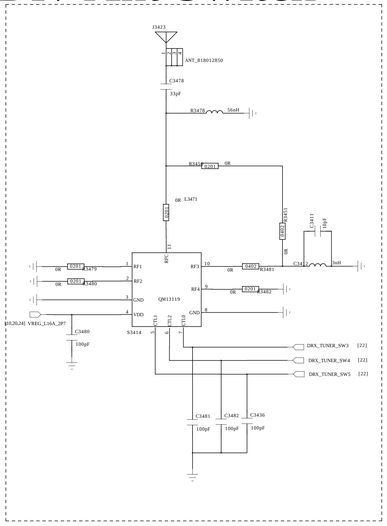

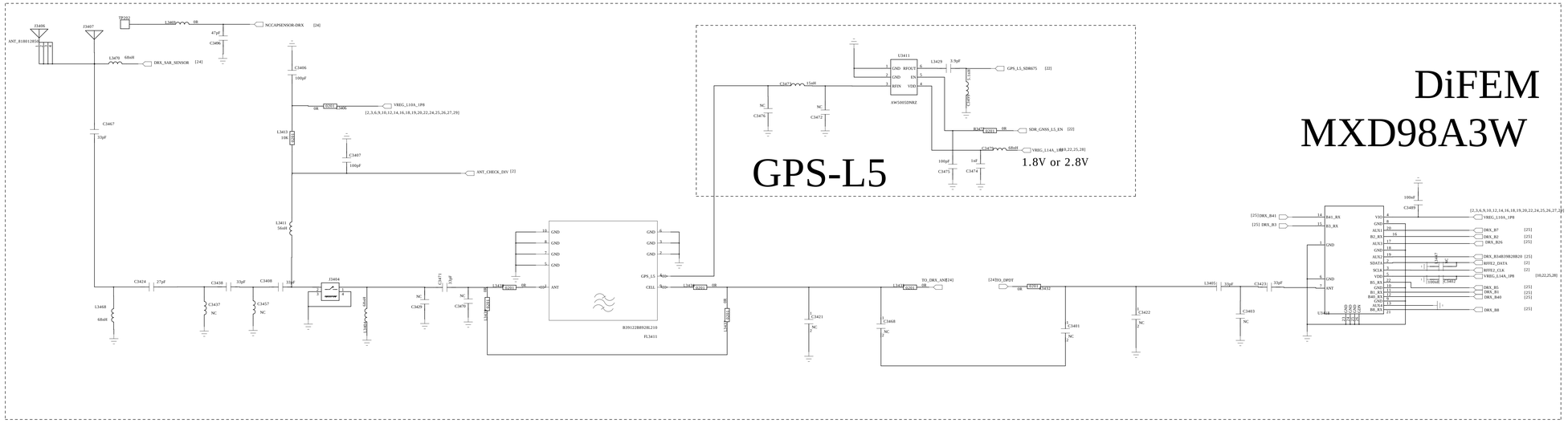

B40_DRX

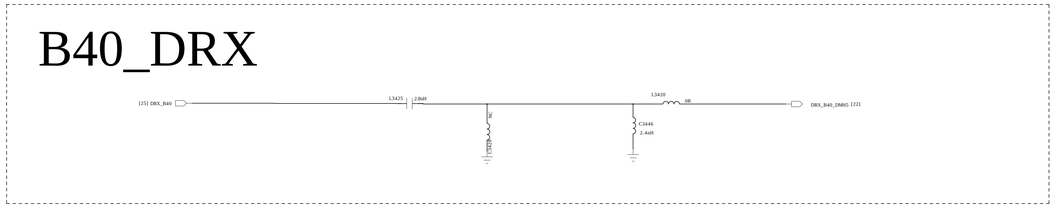

DRX_B34/39_B28/20

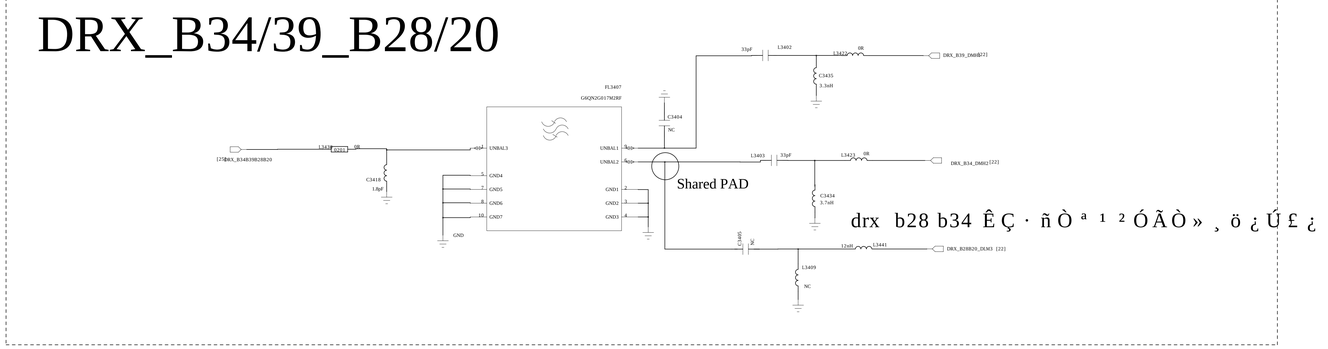

B41/38_DRX

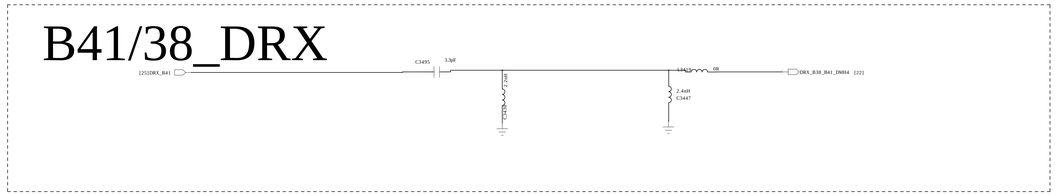

B1/4_DRX

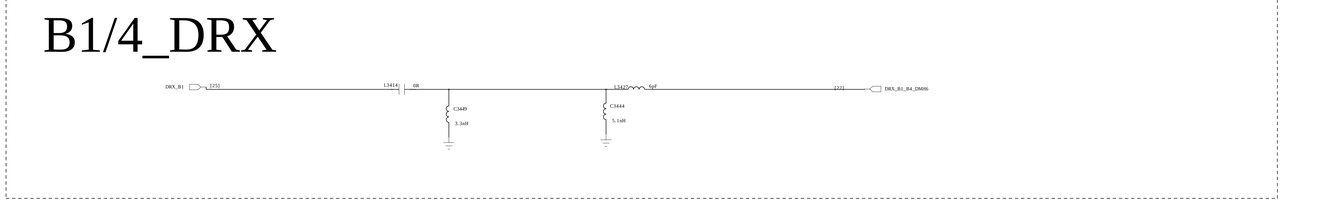

B2_DRX

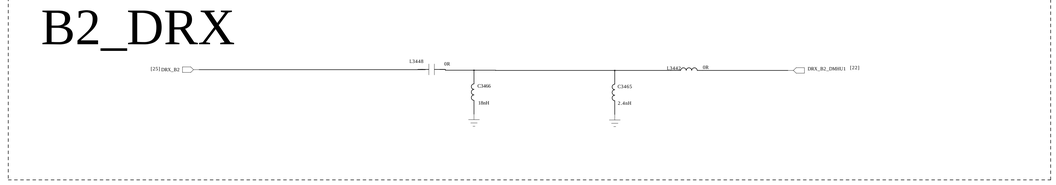

B5_DRX

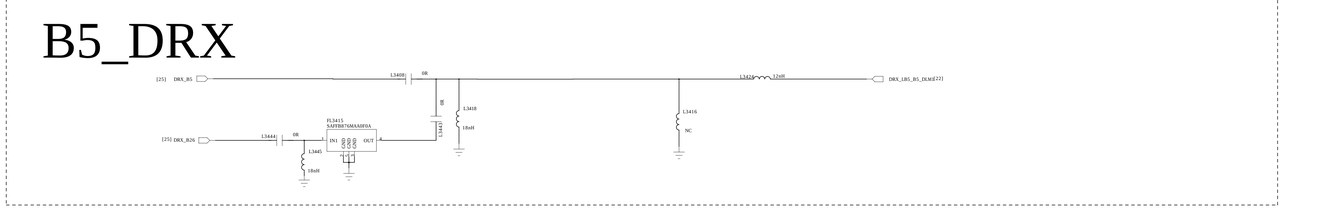

B7_DRX

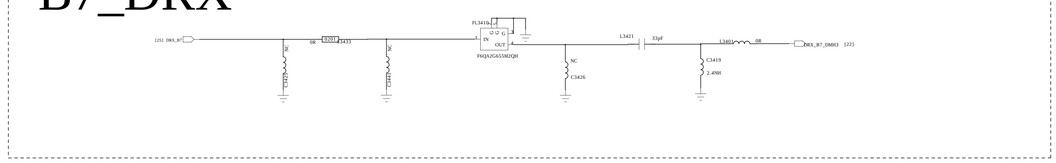

B3_DRX

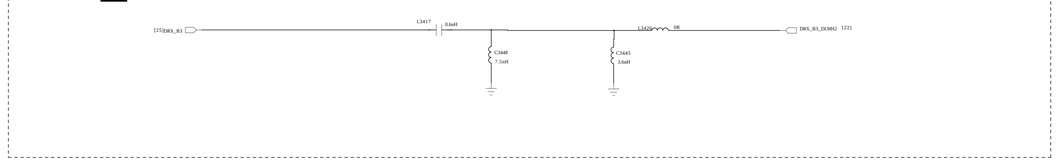

B8 DRX

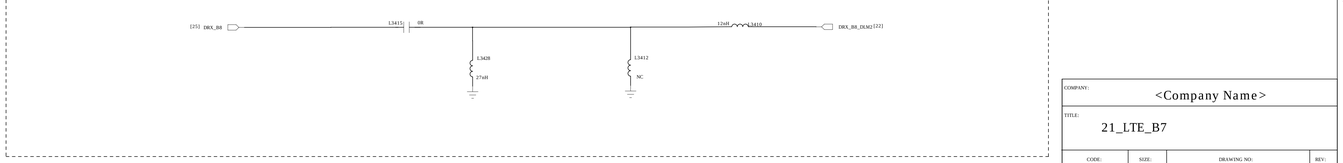

COMPANY: <Company Name>			
TITLE: 21_LTE_B7			
CODE: <Code>	SIZE: A0	DRAWING NO: <Drawing Number>	REV: <Revision>
DRAWN: LiuMengya	DATED: <Drawn Date>		

REVISION RECORD			
LTR	ECO NO:	APPROVED:	DATE:

APT

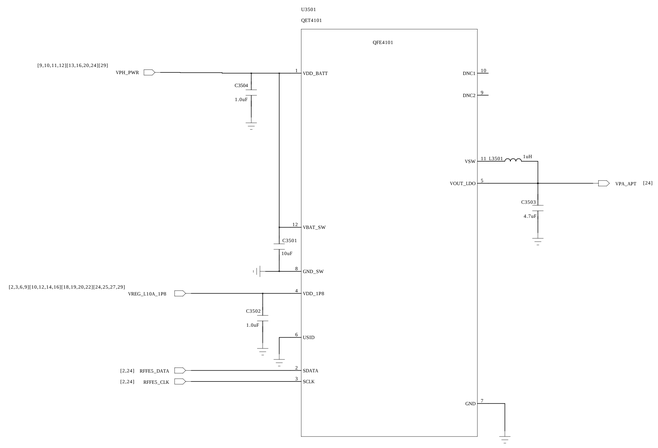

DRAWN: <Drawn By>	DATED: <Drawn Date>	COMPANY: <Company Name>			
CHECKED: <Checked By>	DATED: <Checked Date>	TITLE: <Title>			
QUALITY CONTROL: <QC By>	DATED: <QC Date>	CODE: <Code>	SIZE: A0	DRAWING NO: <Drawing Number>	REV: <Revision>
RELEASED: <Released By>	DATED: <Release Date>	SCALE: <Scale>		SHEET: 26 30	

REVISION RECORD			
LTR	ECO NO:	APPROVED:	DATE:

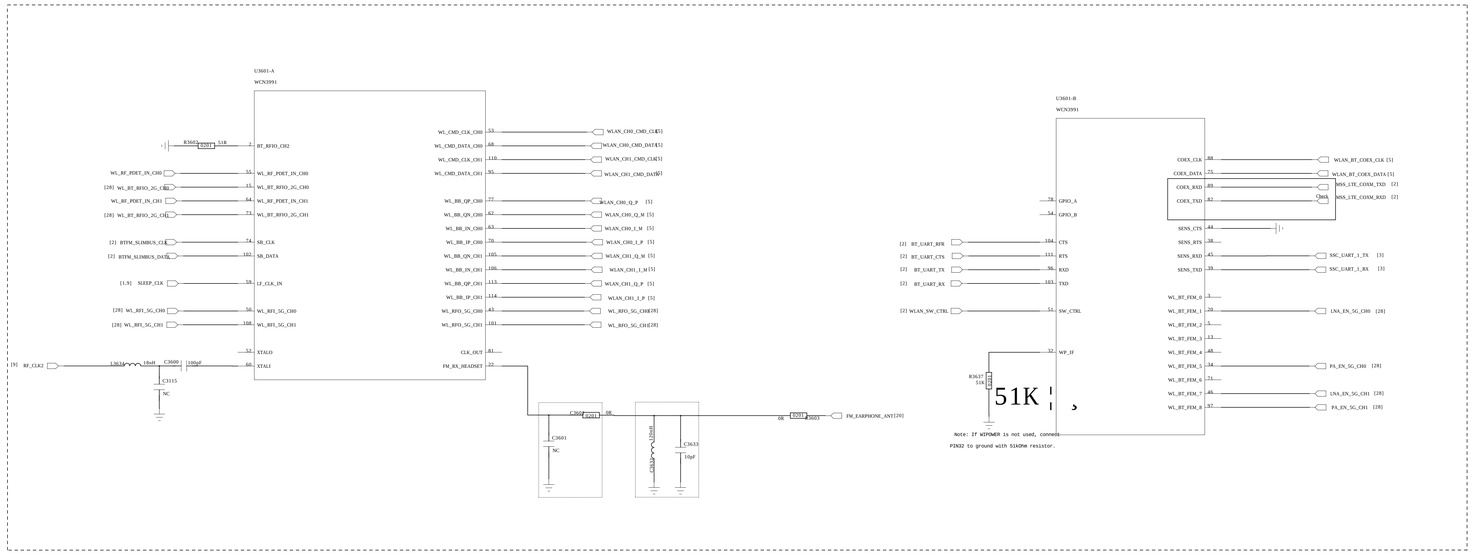

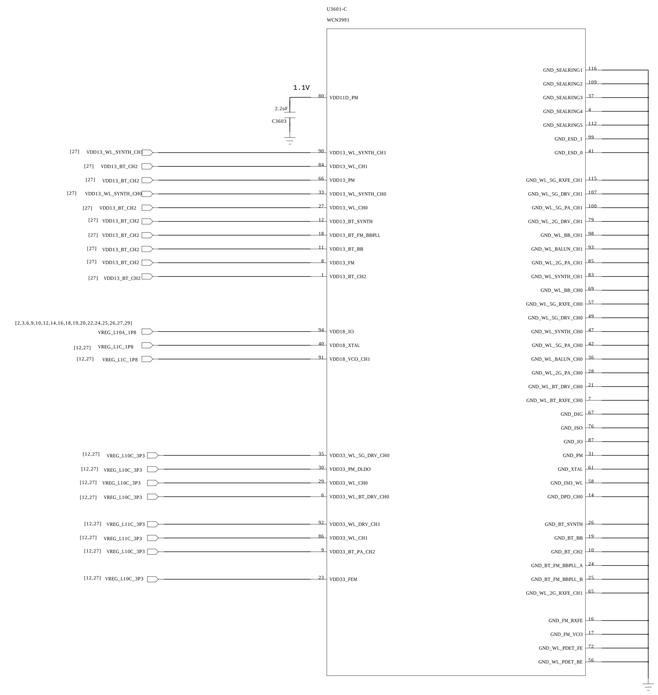

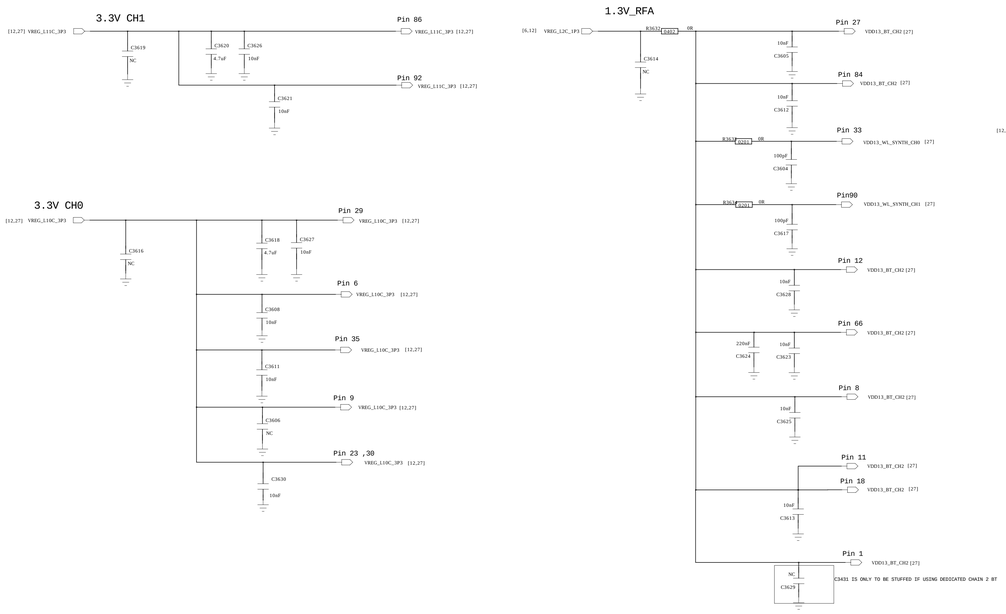

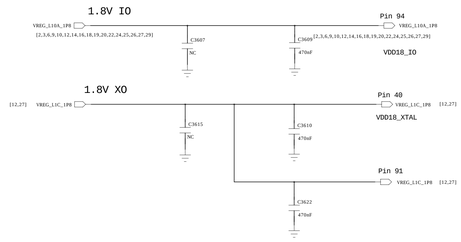

COMPANY: <Company Name>					
TITLE: <Title>					
DRAWN: <Drawn By>	DATED: <Drawn Date>				
CHECKED: <Checked By>	DATED: <Checked Date>	CODE: <Code>	SIZE: A0	DRAWING NO: <Drawing Number>	REV: <Revision>
QUALITY CONTROL: <QC By>	DATED: <QC Date>				
RELEASED: <Released By>	DATED: <Release Date>	SCALE: <Scale>		SHEET: 23 OF 30	

REVISION RECORD			
LTR	ECO NO:	APPROVED:	DATE:

GPS_2G_5G_ANT CH0

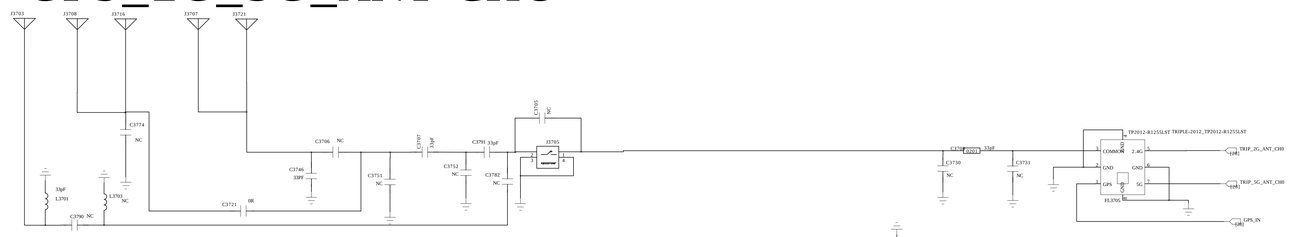

2G_5G_WLAN_CH0

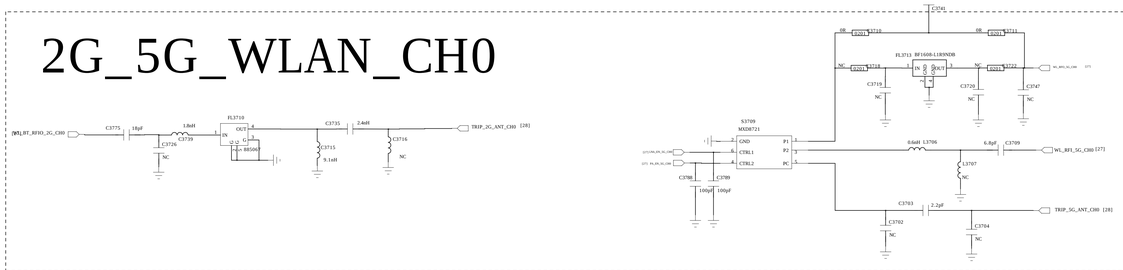

5G wifi ANT CH1

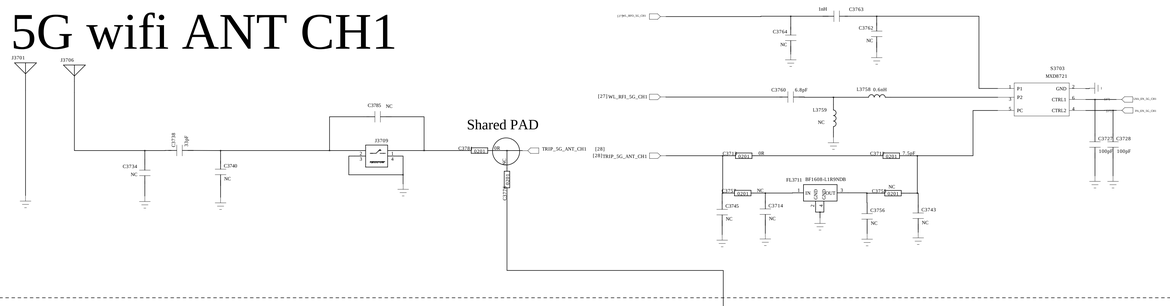

2G_WLAN_CH1_ANT

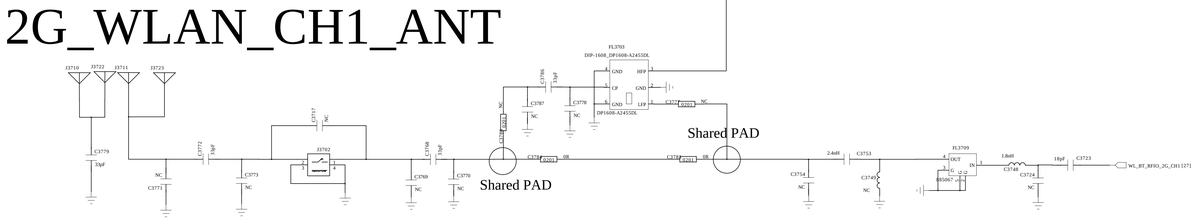

GPS

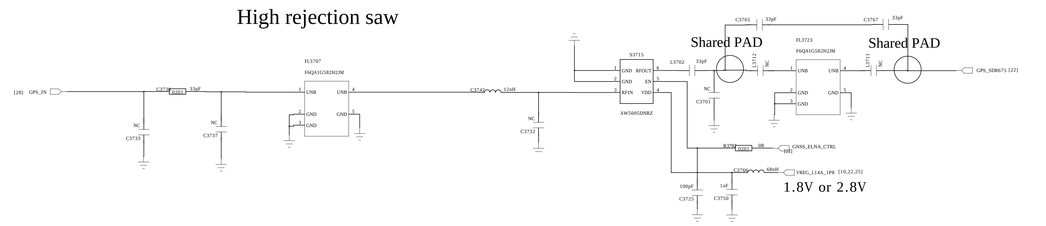

DRAWN: <Drawn By>	DATED: <Drawn Date>	COMPANY: <Company Name>	
CHECKED: <Checked By>	DATED: <Checked Date>	TITLE: <Title>	
QUALITY CONTROL: <QC By>	DATED: <QC Date>	CODE: <Code>	SIZE: A0
RELEASED: <Released By>	DATED: <Release Date>	DRAWING NO: <Drawing Number>	REV: <Revision>
		SCALE: <Scale>	SHEET: 28 OF 30

REVISION RECORD			
LTR	ECO NO:	APPROVED:	DATE:

NFC

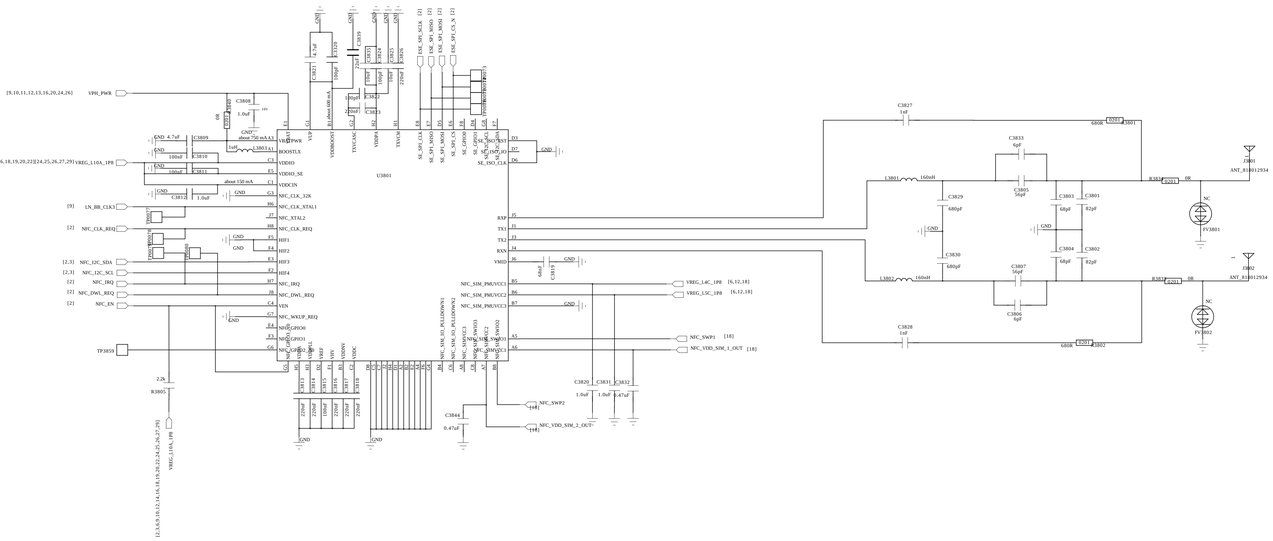

A1-B1

1.LCD POWER change to L18A

2.del R3308

REVISION RECORD			
LTR	ECO NO:	APPROVED:	DATE:

DRAWN: <Drawn By>	DATED: <Drawn Date>
CHECKED: <Checked By>	DATED: <Checked Date>
QUALITY CONTROL: <QC By>	DATED: <QC Date>
RELEASED: <Released By>	DATED: <Release Date>

COMPANY: <Company Name>			
TITLE: <Title>			
CODE: <Code>	SIZE: A0	DRAWING NO: <Drawing Number>	REV: <Revision>
SCALE: <Scale>		SHEET: 30 30	